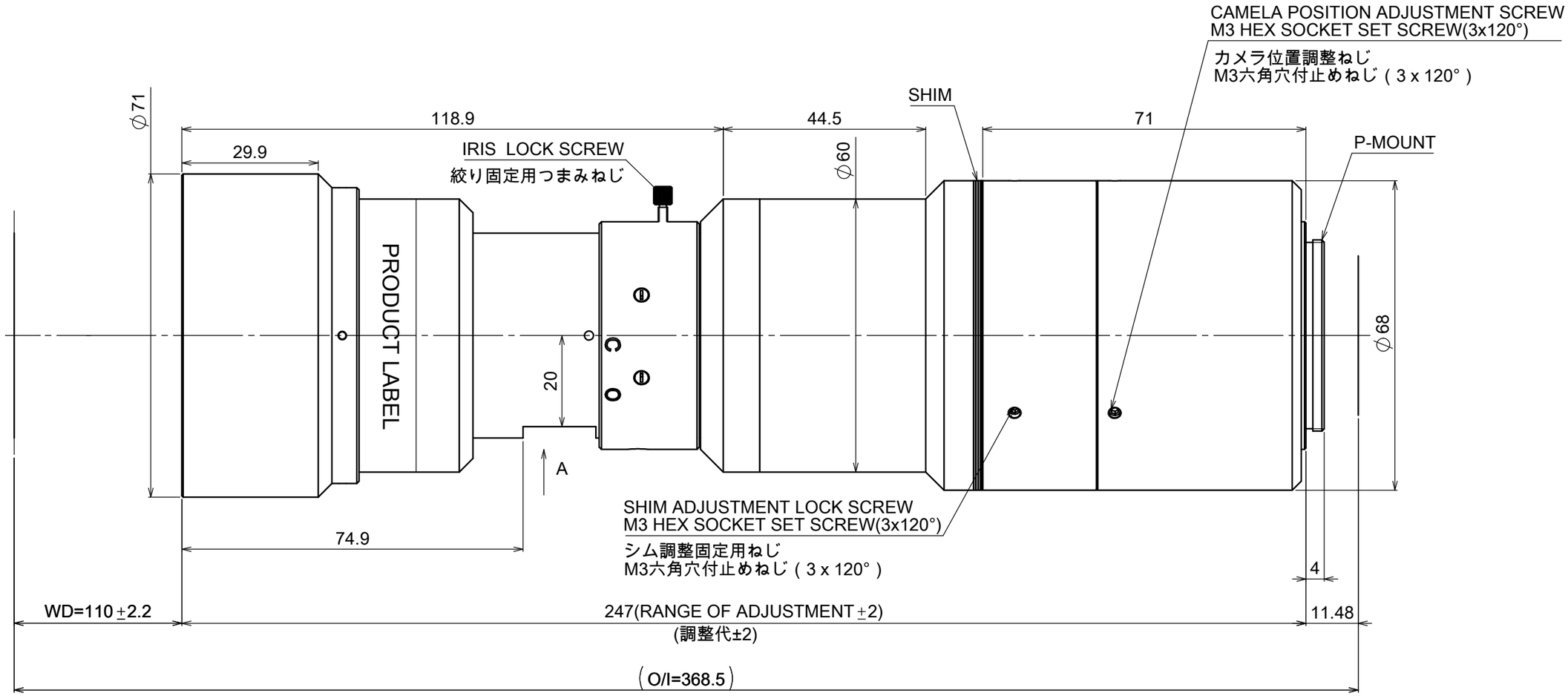

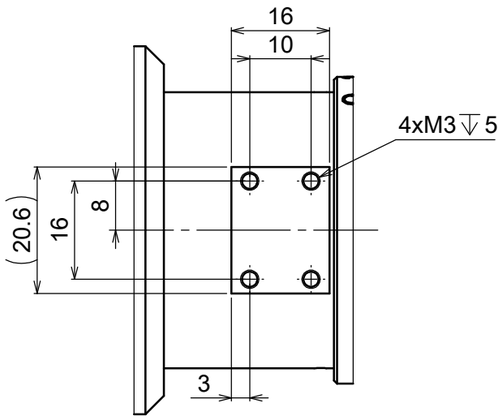

VIEW A

MAGNIFICATION : 0.78x
光学倍率 : 0.78x

Model Name : MTL-4535P-078
MORITEX CORPORATION