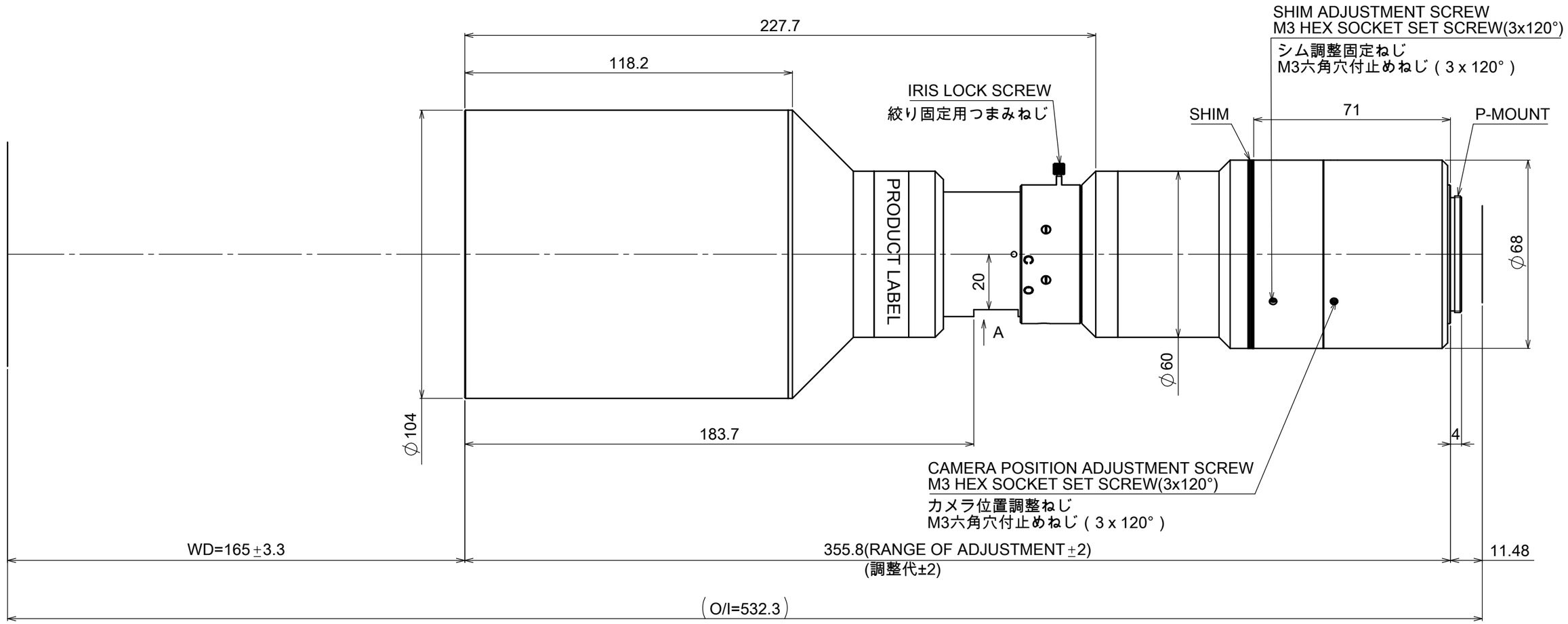


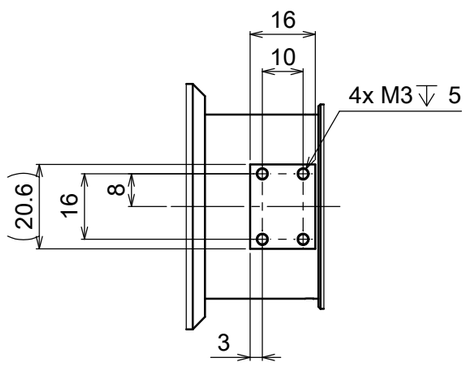


VIEW A

MAGNIFICATION:0.44X
光学倍率:0.44X

Model Name : MTL-8035P-044
MORITEX CORPORATION