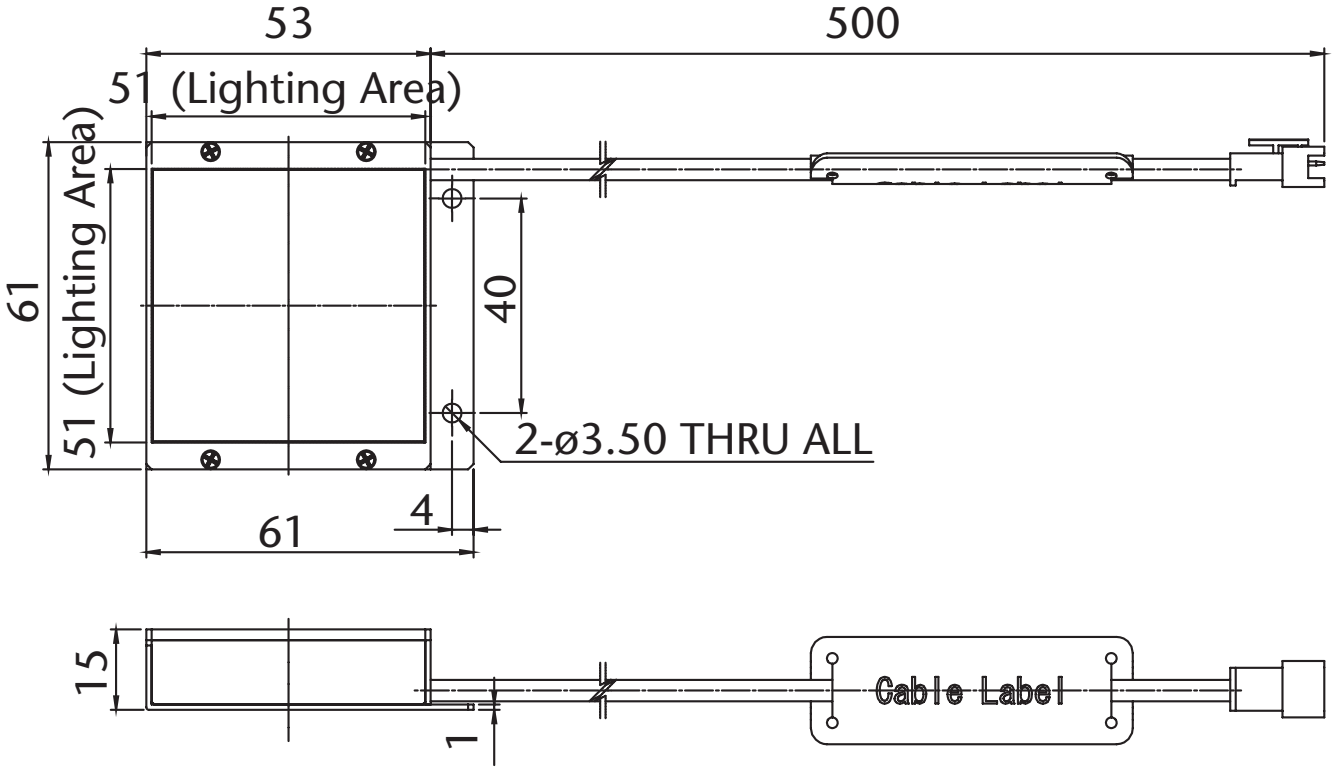

Model Name : CV-FL-51X51#
SCHOTT MORITEX Corporation