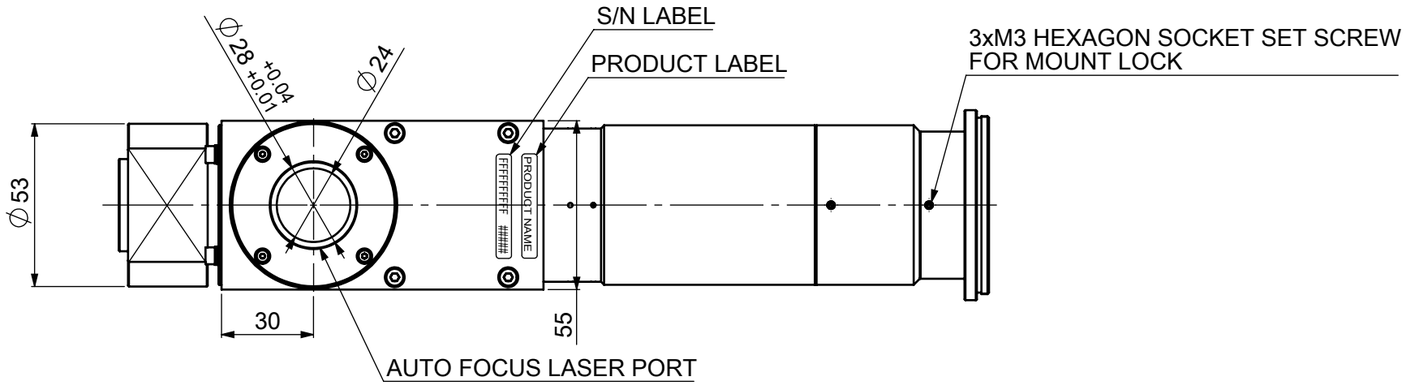

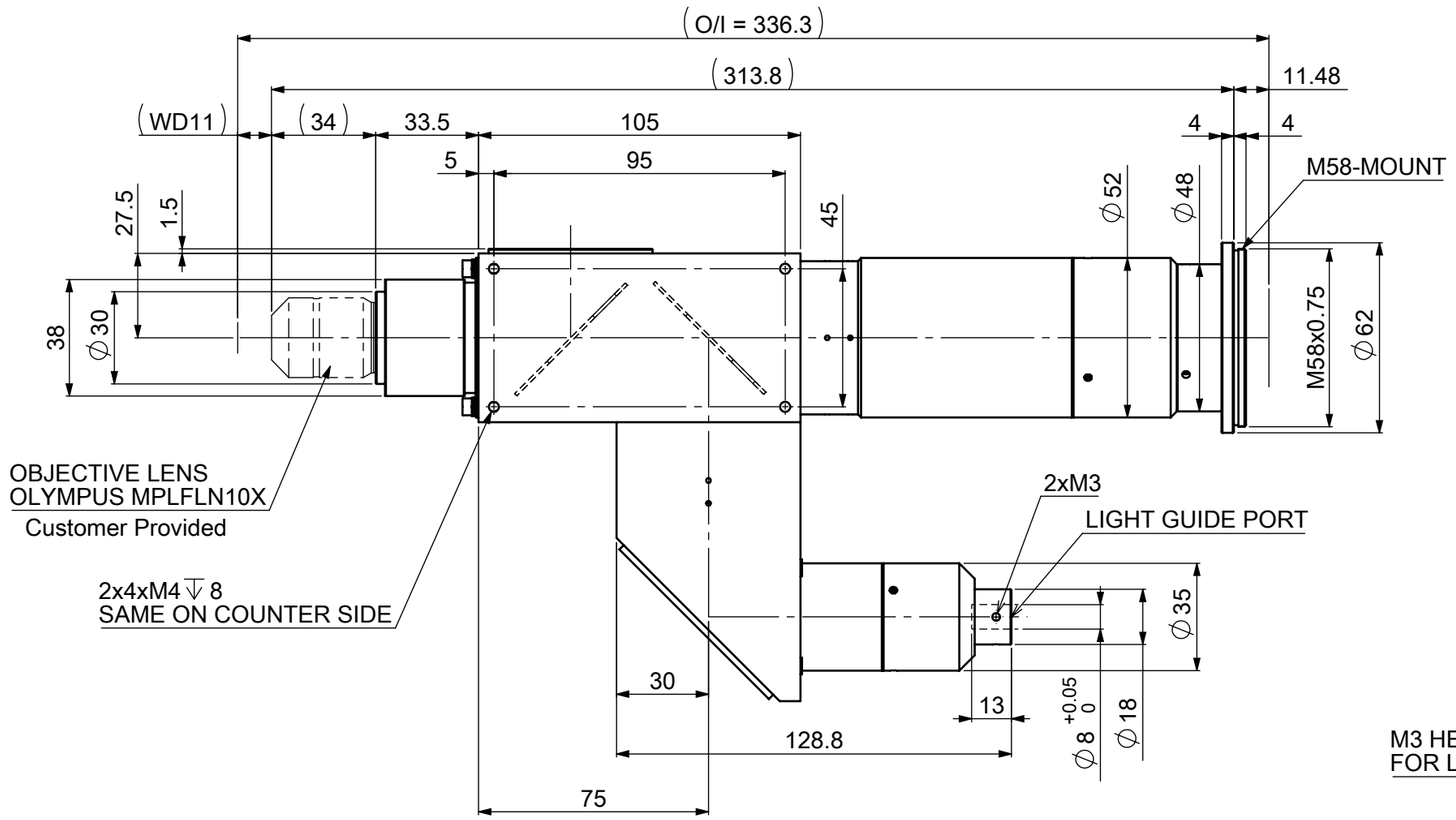

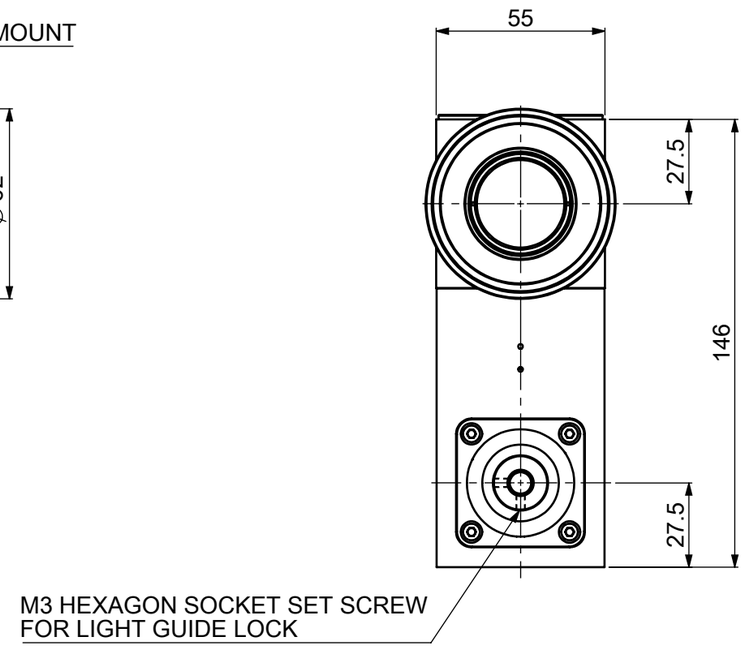

NOTES:
1) OBJECTIVE : OLYMPUS M PLAN SEMIAPOCHROMAT 10X

2) IMAGEING LENS : f = 180

3) IMAGE FORMAT : 32mm

Model Name : SOD-180-32M58-AFP

MORITEX CORPORATION