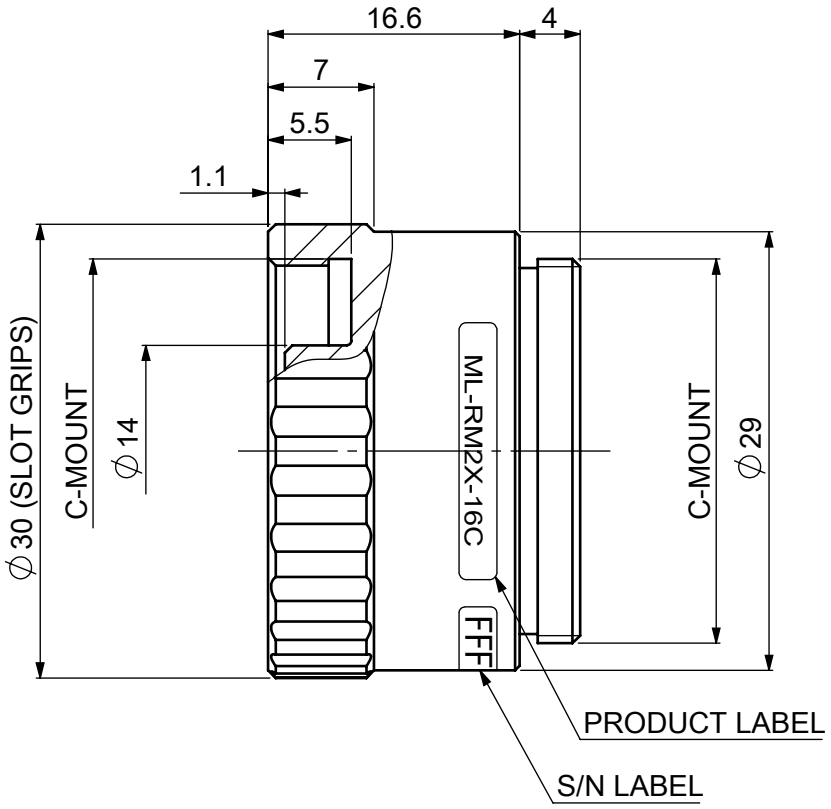

Model Name : ML-RM2X-16C
MORITEX CORPORATION