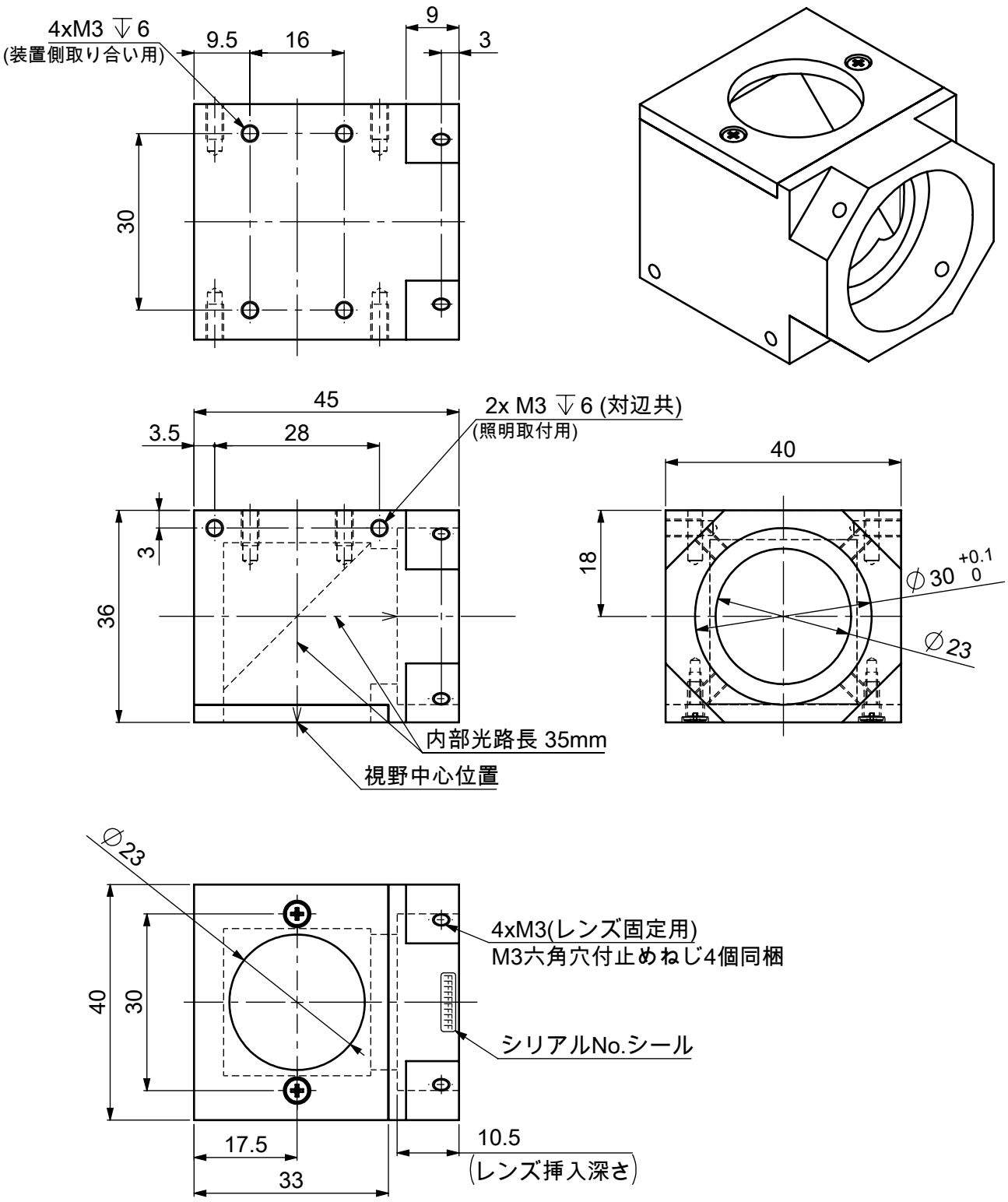

Model Name : MML-PL30HR

MORITEX CORPORATION