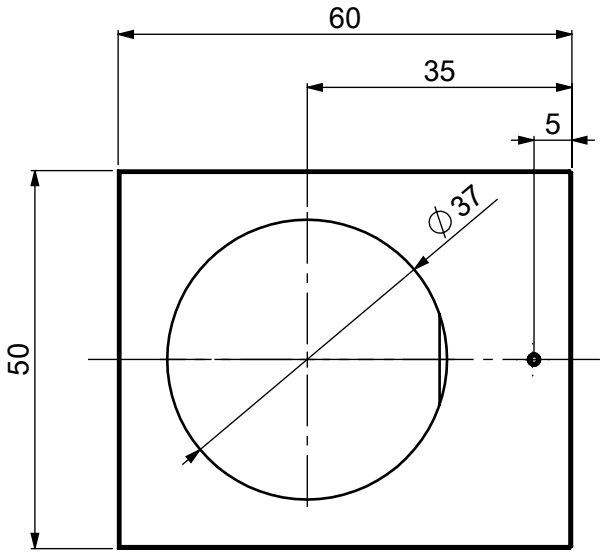

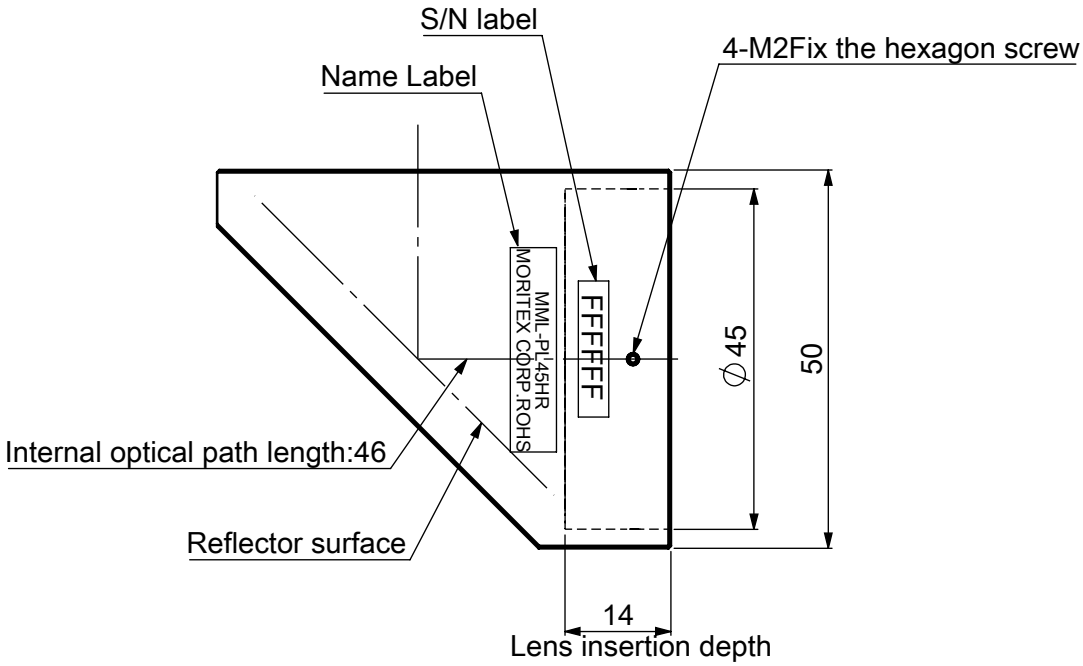

Model Name : MML-PL45HR
MORITEX CORPORATION