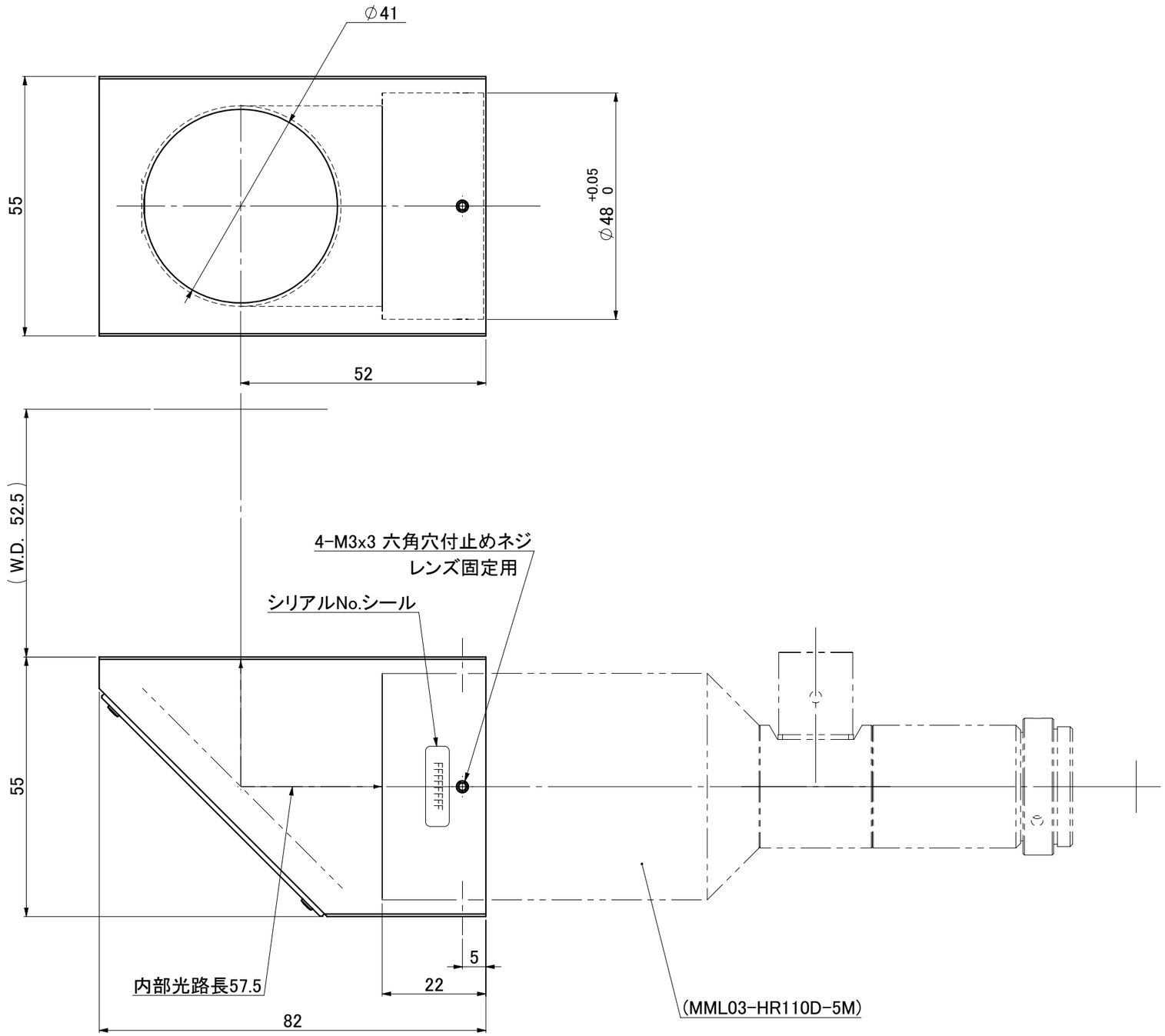

Model Name : MML-PL48HR
MORITEX CORPORATION